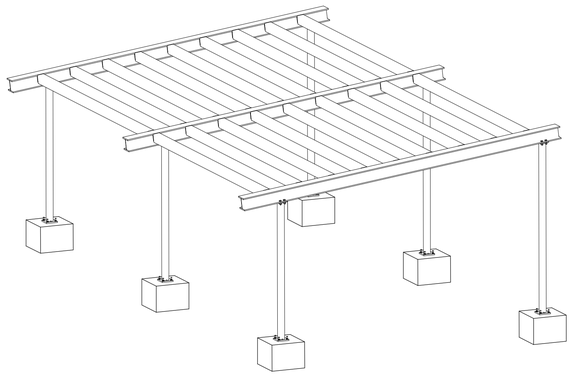

REVIT MODEL

REVIT RENDER

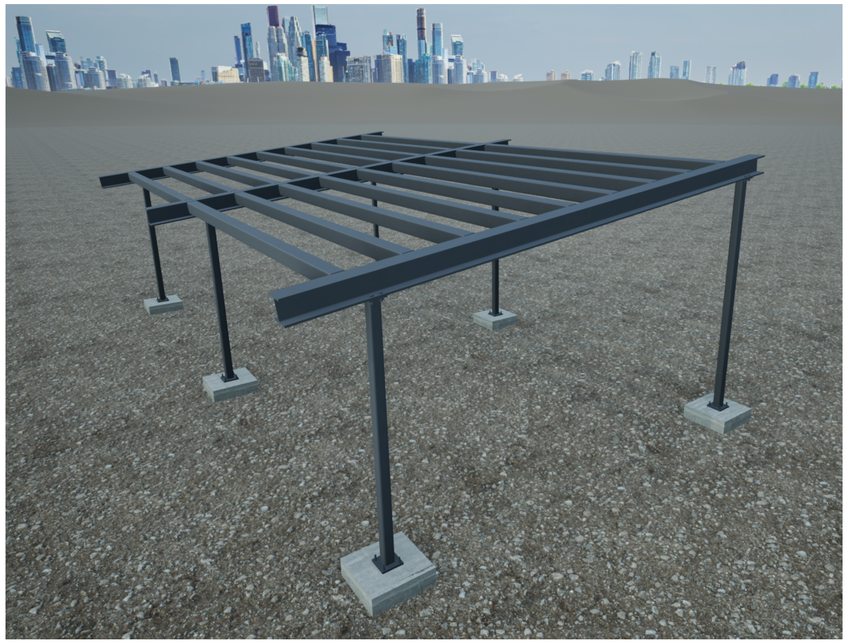

TWINMOTION RENDER

DRAWING LIST	
SHEET NO.	SHEET NAME
A -00	Cover Sheet
A -01	General Layout & Sections
A -02	Connections
S -01	Anchor connection details
S -02	Column details
S -03	Rafter & Beam details
S -04	Rafter & Beam connection details

DRAFTING SOLUTIONS

TEL: 876 817 3220
EMAIL: draftingsolutions876@gmail.com

NOTES

Rev	Description	Date

CODE | SUITABILITY DESCRIPTION

STATUS | PURPOSE OF ISSUE

PROJECT
Steel Canopy

TITLE
Cover Sheet

CLIENT
UPWORK

DRAWN BY	CHECKED BY	DATE
AS	KS	NOV 2025

SCALE (@ A1)	PROJECT NUMBER
12" = 1'-0"	001

DRAWING NUMBER	REV
A -00	

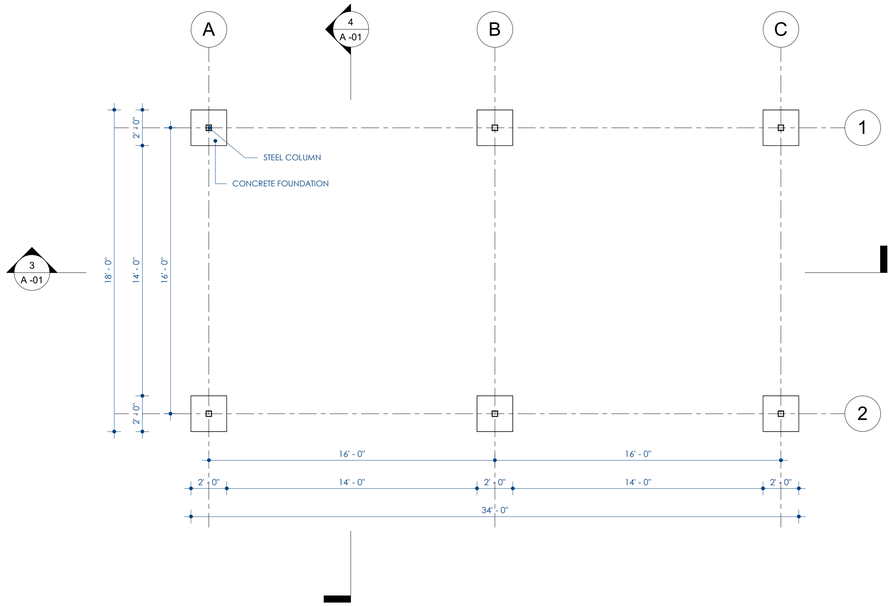

1 Level 1

1/4" = 1'-0"

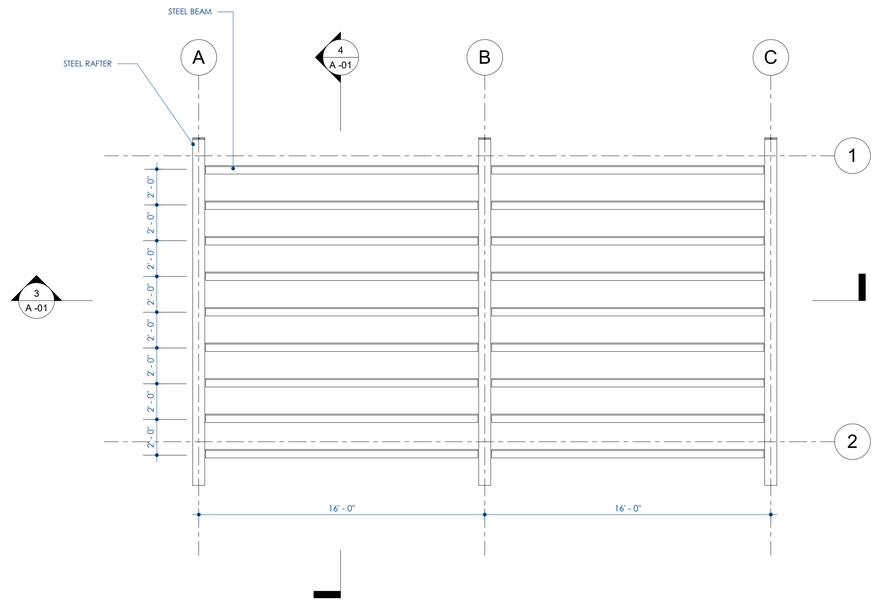

2 Level 3

1/4" = 1'-0"

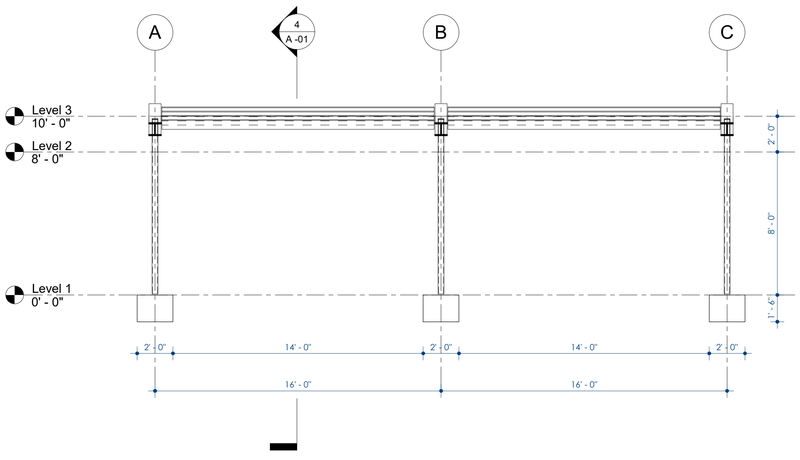

3 Section x-x

1/4" = 1'-0"

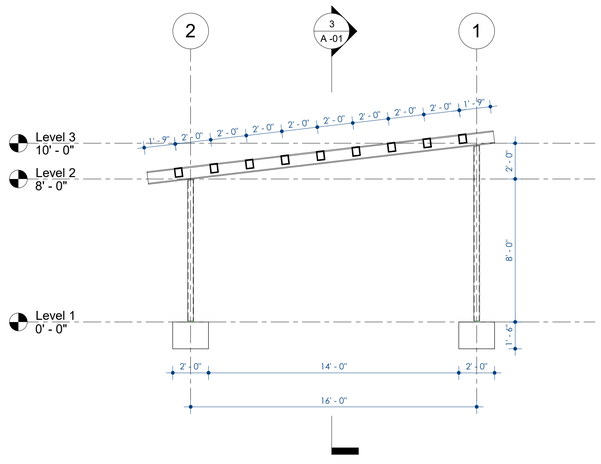

4 Section y-y

1/4" = 1'-0"

DRAFTING SOLUTIONS

TEL: 876 817 3220
EMAIL: draftingsolutions876@gmail.com

NOTES

Rev	Description	Date

CODE	SUITABILITY DESCRIPTION
STATUS	PURPOSE OF ISSUE

PROJECT

Steel Canopy

TITLE

General Layout & Sections

CLIENT

UPWORK

DRAWN BY	CHECKED BY	DATE
AS	KS	NOV 2025

SCALE (@ A1)	PROJECT NUMBER
1/4" = 1'-0"	001

DRAWING NUMBER	REV
A -01	

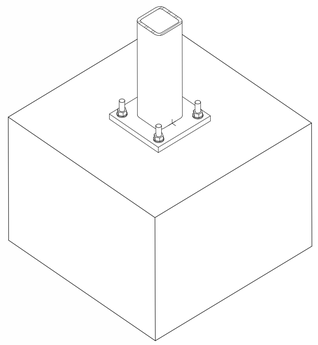

1 3D - anchor connection

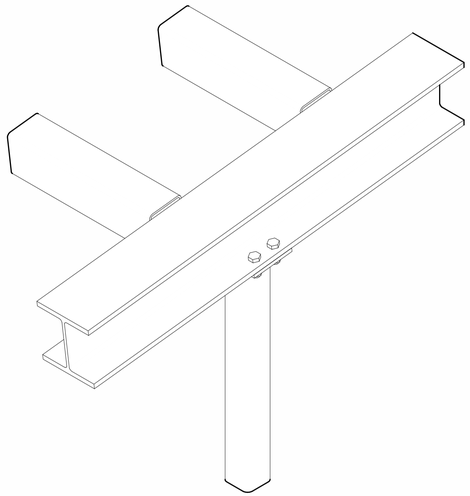

3 3D - rafter connection

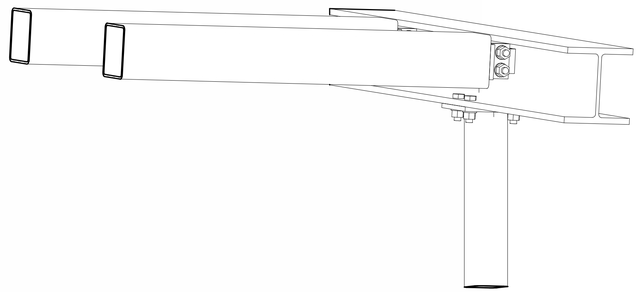

5 3D - beam connection

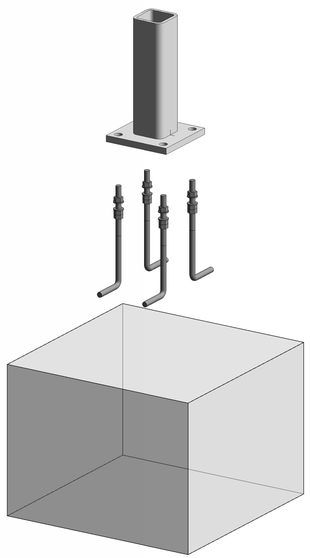

2 3D - anchor connection- displaced

4 3D - rafter connection - displaced

6 3D - beam connection - displaced

DRAFTING SOLUTIONS

TEL: 876 817 3220
EMAIL: draftingsolutions876@gmail.com

NOTES

Rev	Description	Date

CODE	SUITABILITY DESCRIPTION
STATUS	PURPOSE OF ISSUE

PROJECT

Steel Canopy

TITLE

Connections

CLIENT

UPWORK

DRAWN BY	CHECKED BY	DATE
Author	Checker	NOV 2025

SCALE (@ A1)	PROJECT NUMBER
	001

DRAWING NUMBER	REV
A -02	

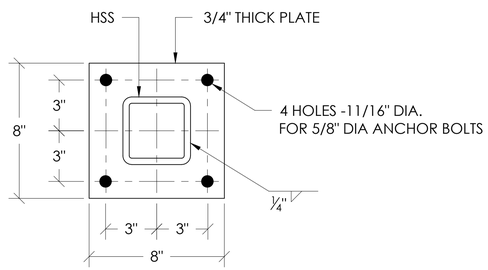

COLUMN BASE PLATE DETAIL

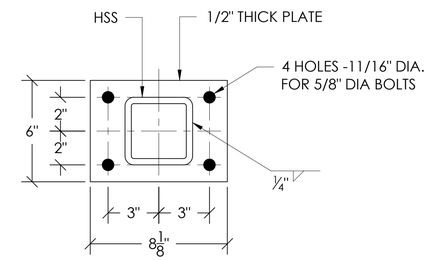

COLUMN CAP PLATE DETAIL

TRUE SHAPE: Plate Shown Normal to Its Surface
1/2" = 1'

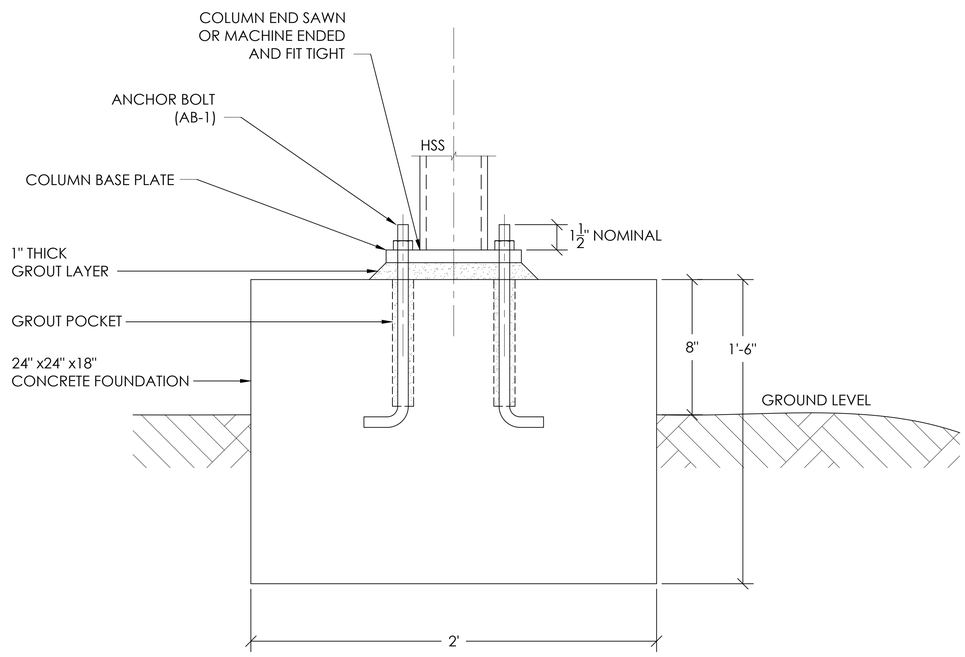

COLUMN BASE DETAIL

ANCHOR BOLT SCHEDULE

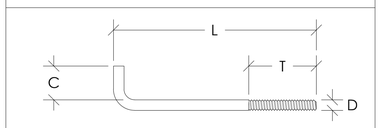

NAME	D	C	L	T
AB1	5/8"	2"	12"	4"

DRAFTING
SOLUTIONS
TEL: 876 817 3220
EMAIL: draftingsolutions876@gmail.com

NOTES

Unless otherwise stated

1. Structural steel shall conform to ASTM A36
2. Plate steel shall conform to ASTM A36
3. All structural bolts Grade A325; nut and hardened washer per ASTM F436
4. All welding to AWS D1.1 standard for structural steel. Use E7018 electrodes for carbon steel. All fillet welds are minimum.
5. **Surface treatment / paint**
   - **Shop primer:** SSPC-SP6 or comparable surface prep (blast-clean to near-white) then apply 2 coats of zinc-rich primer or epoxy primer to 2-3 mil DFT.
   - **Topcoat:** Two coats of polyurethane (architectural color by client) total 2-3 mil DFT. Touch up welds after installation. Provide touch-up kit for installer.

Rev	Description	Date

CODE	SUITABILITY DESCRIPTION -
STATUS -	PURPOSE OF ISSUE -

PROJECT
Steel Canopy

TITLE
Anchor Connection details

CLIENT
UPWORK

DRAWN BY	CHECKED BY	DATE
AS	KS	NOV 2025

SCALE (@ A1)	PROJECT NUMBER
1/2" = 1'	001

DRAWING NUMBER	REV
S-01	

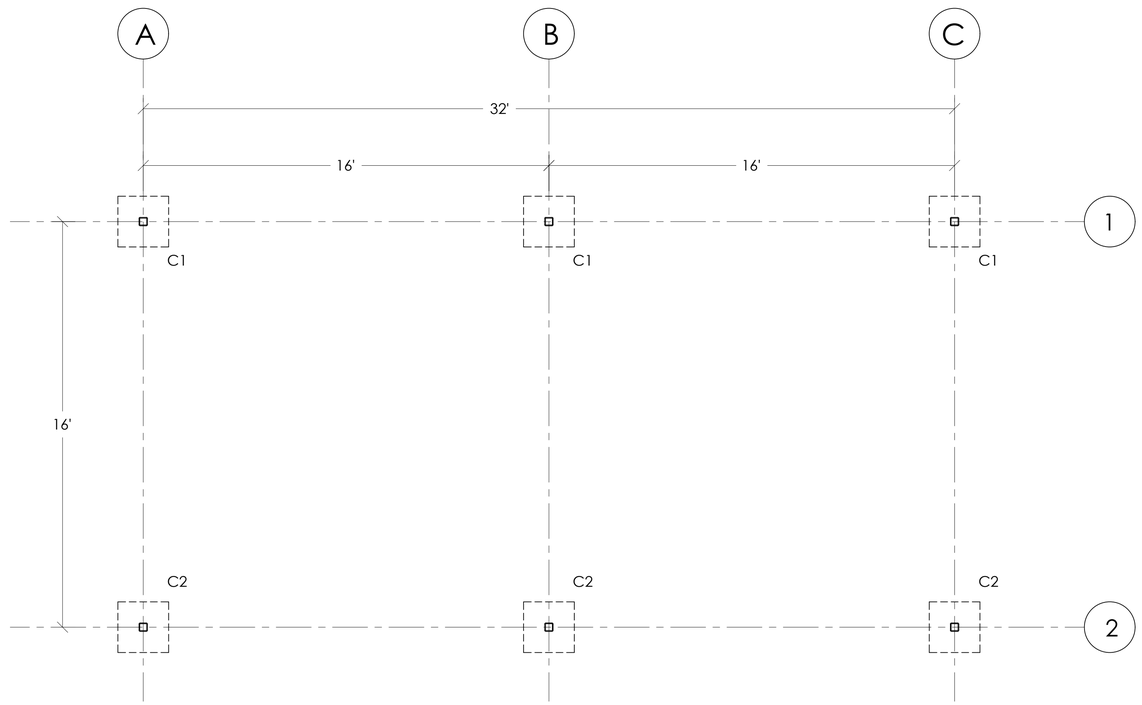

COLUMN LAYOUT PLAN

1/16" = 1'

COLUMN SCHEDULE

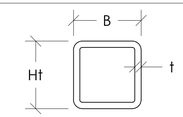

NAME	REFERENCE	Ht	B	t	COLUMN HEIGHT
C1	HSS 4 x4 x0.375	4.00"	4.00"	0.375"	10'
C2	HSS 4 x4 x0.375	4.00"	4.00"	0.375"	8'

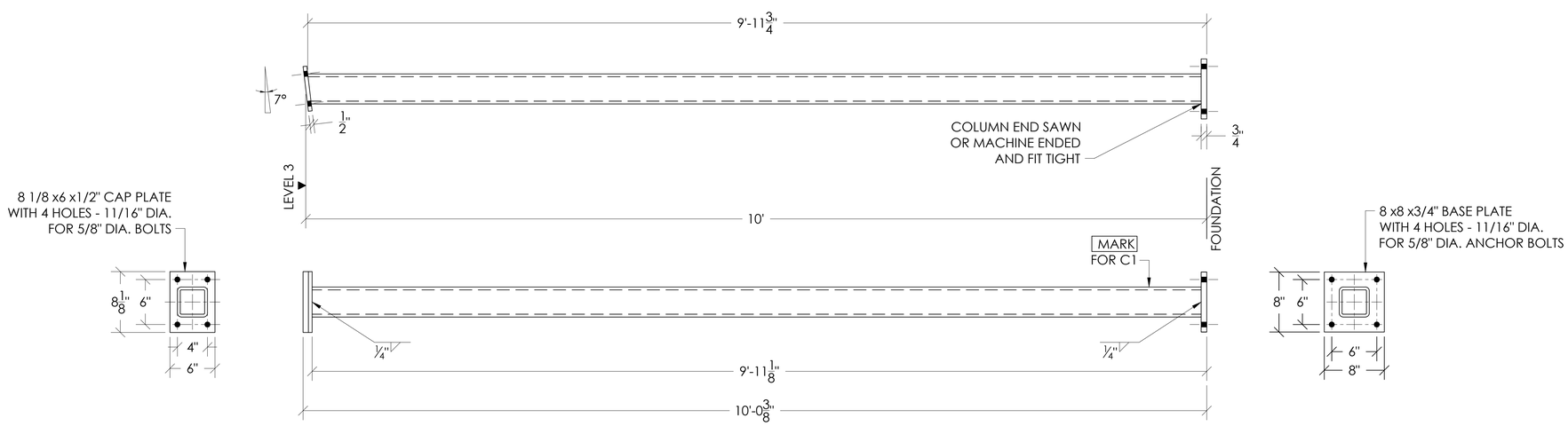

C1 WORKSHOP DRAWING

1/4" = 1'

DRAFTING SOLUTIONS

TEL: 876 817 3220
EMAIL: draftingsolutions876@gmail.com

NOTES

Unless otherwise stated

1. Structural steel shall conform to ASTM A36
2. Plate steel shall conform to ASTM A36
3. All structural bolts Grade A325; nut and hardened washer per ASTM F436
4. All welding to AWS D1.1 standard for structural steel. Use E7018 electrodes for carbon steel. All fillet welds are minimum.
5. **Surface treatment / paint**
   - **Shop primer:** SSPC-SP6 or comparable surface prep (blast-clean to near-white) then apply 2 coats of zinc-rich primer or epoxy primer to 2-3 mil DFT.
   - **Topcoat:** Two coats of polyurethane (architectural color by client) total 2-3 mil DFT. Touch up welds after installation. Provide touch-up kit for installer.

Rev	Description	Date

CODE	SUITABILITY DESCRIPTION
-	-
STATUS	**PURPOSE OF ISSUE**
-	-

PROJECT: Steel Canopy

TITLE: Column details

CLIENT: UPWORK

DRAWN BY	CHECKED BY	DATE
AS	KS	NOV 2025

SCALE (@ A1)	PROJECT NUMBER
AS SHOWN	001

DRAWING NUMBER	REV
S-02	

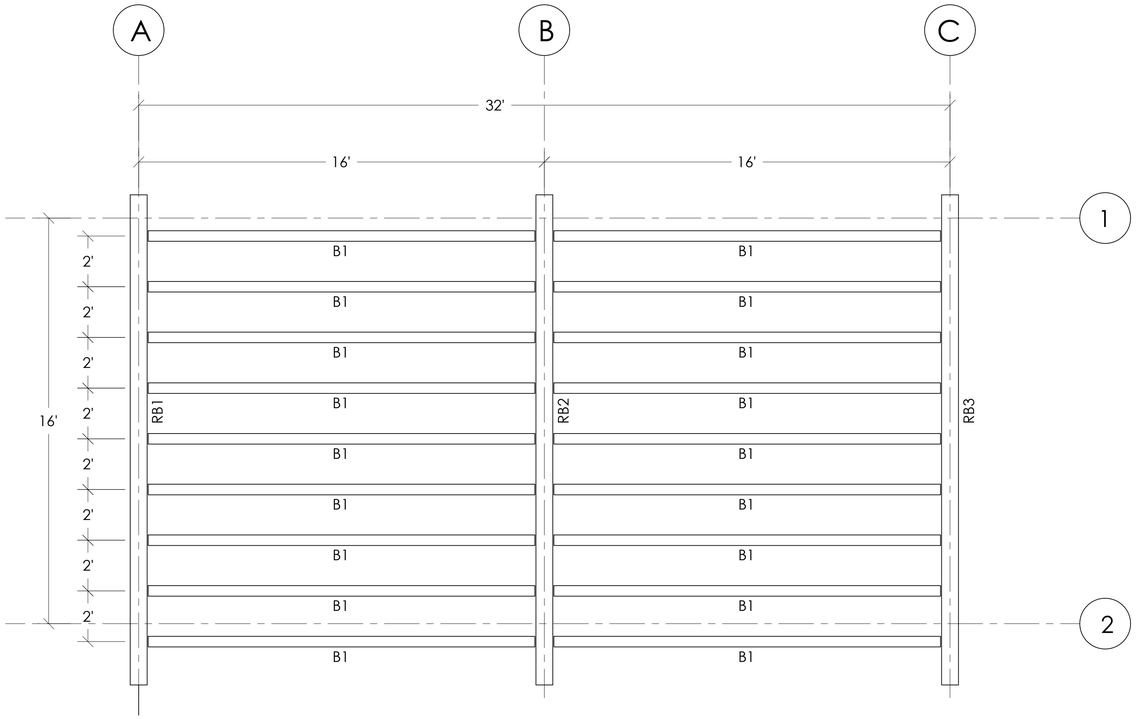

RAFTER & BEAM LAYOUT PLAN

1/16" = 1'

BEAM SCHEDULE

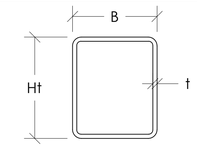

NAME	REFERENCE	Ht	B	t	BEAM LENGTH
B1	HSS 6 x5 x0.125	6.00"	5.00"	0.250"	15'-2"

RAFTER SCHEDULE

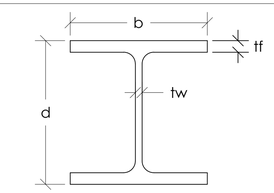

NAME	REFERENCE	d	b	tw	tf	RAFTER LENGTH
RB1-RB3	W 8 x48	8.50"	8.11"	0.400"	0.685"	19'-6"

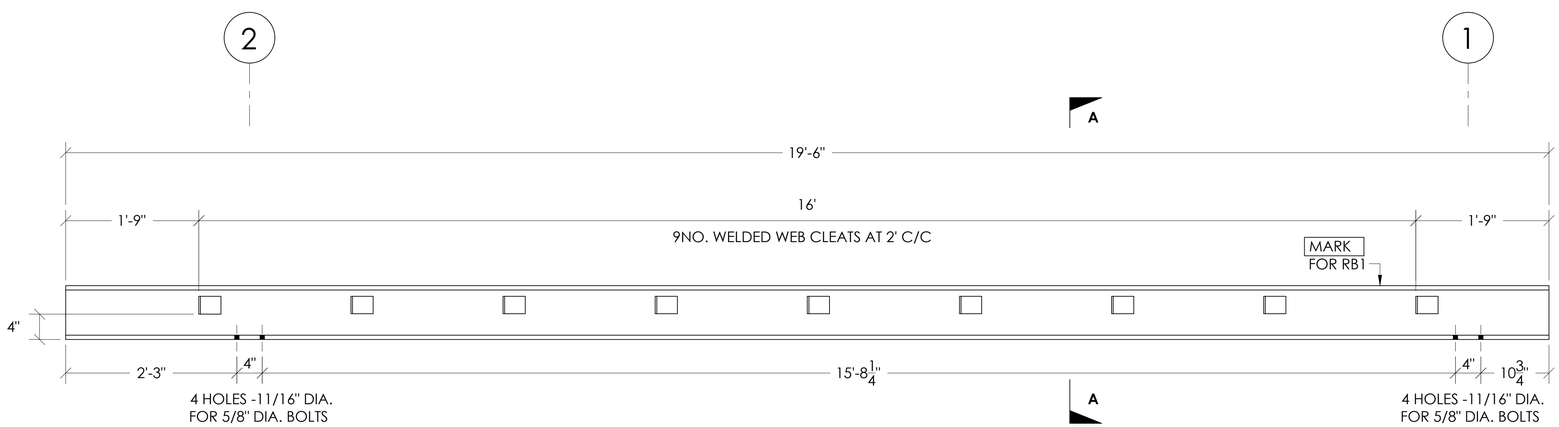

RB1 WORKSHOP DRAWING

3/16" = 1'

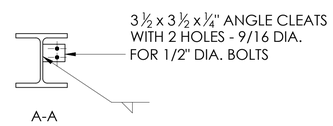

DRAFTING SOLUTIONS
TEL: 876 817 3220
EMAIL: draftingsolutions876@gmail.com

NOTES

Unless otherwise stated

1. Structural steel shall conform to ASTM A36
2. Plate steel shall conform to ASTM A36
3. All structural bolts Grade A325; nut and hardened washer per ASTM F436
4. All welding to AWS D1.1 standard for structural steel. Use E7018 electrodes for carbon steel. All fillet welds are minimum.
5. **Surface treatment / paint**
   - **Shop primer:** SSPC-SP6 or comparable surface prep (blast-clean to near-white) then apply 2 coats of zinc-rich primer or epoxy primer to 2-3 mil DFT.
   - **Topcoat:** Two coats of polyurethane (architectural color by client) total 2-3 mil DFT. Touch up welds after installation. Provide touch-up kit for installer.

Rev	Description	Date

CODE	SUITABILITY DESCRIPTION
-	-
STATUS	**PURPOSE OF ISSUE**
-	-

PROJECT
Steel Canopy

TITLE
Rafter & Beam details

CLIENT
UPWORK

DRAWN BY	CHECKED BY	DATE
AS	KS	NOV 2025

SCALE (@ A1)	PROJECT NUMBER
AS SHOWN	001

DRAWING NUMBER	REV
S-03	

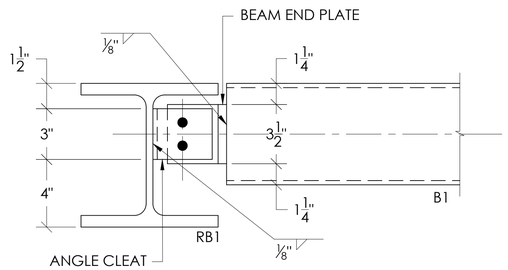

RAFTER/ BEAM CONNECTION DETAIL

1/2" =1'

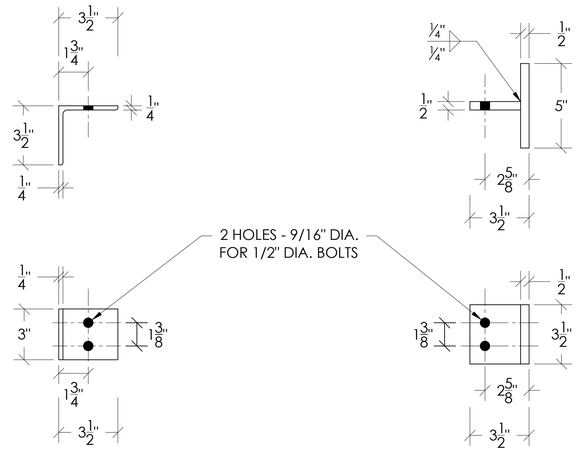

ANGLE CLEAT DETAIL

1/2" =1'

BEAM END PLATE DETAIL

1/2" =1'

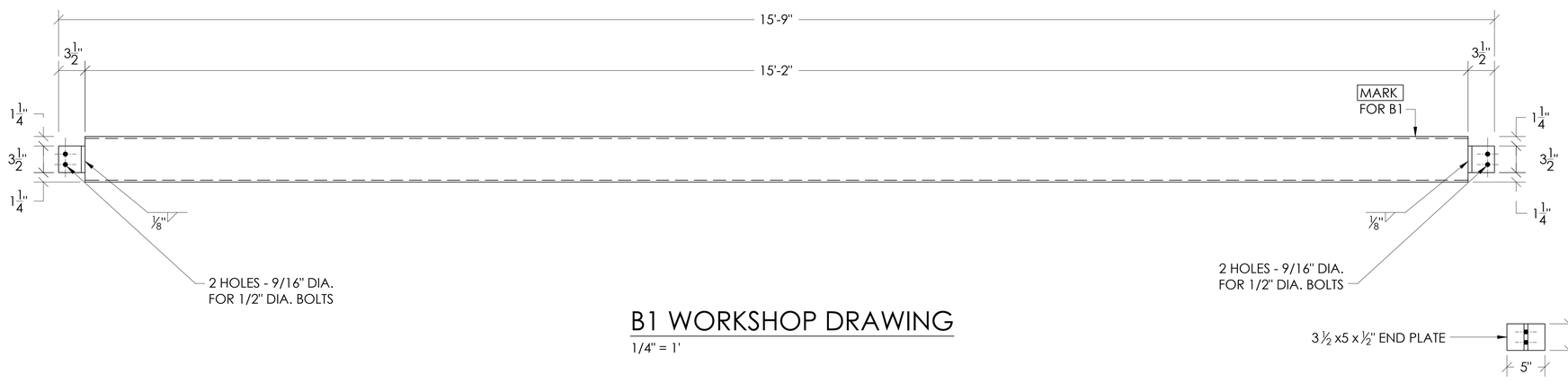

B1 WORKSHOP DRAWING

1/4" = 1'

DRAFTING
SOLUTIONS

TEL: 876 817 3220
EMAIL: draftingsolutions876@gmail.com

NOTES

Unless otherwise stated

1. Structural steel shall conform to ASTM A36
2. Plate steel shall conform to ASTM A36
3. All structural bolts Grade A325; nut and hardened washer per ASTM F436
4. All welding to AWS D1.1 standard for structural steel. Use E7018 electrodes for carbon steel. All fillet welds are minimum.
5. **Surface treatment / paint**
   - **Shop primer:** SSPC-SP6 or comparable surface prep (blast-clean to near-white) then apply 2 coats of zinc-rich primer or epoxy primer to 2-3 mil DFT.
   - **Topcoat:** Two coats of polyurethane (architectural color by client) total 2-3 mil DFT. Touch up welds after installation. Provide touch-up kit for installer.

Rev	Description	Date

CODE	SUITABILITY DESCRIPTION
-	-
STATUS	**PURPOSE OF ISSUE**
-	-

PROJECT

Steel Canopy

TITLE

Rafter & Beam Connection details

CLIENT

UPWORK

DRAWN BY	CHECKED BY	DATE
AS	KS	NOV 2025

SCALE (@ A1)	PROJECT NUMBER
AS SHOWN	001

DRAWING NUMBER	REV
S-04	